University of Dar es Salaam Library Journal
Vol 15, No 2 (2020), pp 100-120
ISSN: 0856-1818

Social media effectiveness on youth purchasing behaviour of soft drinks in Tanzania: a study of University of Dar es Salaam students

Omari, K. Mbura
University of Dar es Salaam Business School, Tanzania
Email: mburao@yahoo.com

Sumaya, M. Kagoya
Makerere University Business School, Uganda
Email: thumakago@gmail.com

Abstract

The article assesses social media effectiveness on youth purchasing behaviour of soft drinks in Tanzania. With the help of the AIDA Model and Media Theory, the article focuses on the content, attitude and awareness of social media as they affect youth purchasing behaviour of soft drinks. A structured questionnaire to gather data was distributed to 80 conveniently sampled non PhD University of Dar es Salaam youth students. More so, 3 purposively selected key informants were interviewed for in-depth information. A mixed method approach was used for data analysis, where quantitative analysis was primarily utilised and complemented by in-depth interviews from key informants. Multiple regression analysis aided by SPSS Version 20 was used to analyse the quantitative data. The findings indicate that of the three constructs, youth purchasing behaviour appears to be positively and significantly influenced by two predictor variables namely, content and awareness of social media constructs. A third construct of attitude towards social media had a positive, but insignificant influence on youth purchasing behaviour. The article recommends that soft drinks companies should effectively utilise social media platforms, by adopting effective use of social media content through enhanced clarity and identity of content. Moreover, companies should capitalise on awareness opportunities created through ease of social media use and the level of knowledge of youths as means to recruit new consumers as well as retain existing ones.

Keywords: Social media, consumer buying behaviour, and youth

Introduction

Studying consumer buying behaviour is important in general, and among the youths in particular, as it helps marketers to assess the kind of products preferred by consumers so that they can release competitive products to the market. Buying behaviour marketing is a process of forming relationships between products offered in the market and intended buying behaviour groups (Sivasankaran, 2017). Youth market in particular tends to shift its preference and habitually follows the regularity of time-based fashion and taste; this affects the buying pattern causing discomfort in business at certain times (Kagoya & Mkwizu, 2019). In response, marketers have to spend more money on market research every year to be able to predict the shifting behaviour of the youths (Kraak, Gootman & McGinnis, 2006).

Evans, Jamal and Foxall (2009) observe that the evolution of social media has become a vital communication channel by virtual manufacturers and retailers to communities who may never meet in the physical world but can impact consumer purchasing behaviour. Social media is therefore changing the business landscape and redefining how businesses communicate across their channels of distribution and with their customers provided that a positive attitude is developed towards social media use. Boateng and Okoe (2015) indicate that there is significant relationship between consumers' attitudes towards social media advertising and their behavioural responses. Consumers use social media to interact with friends, view photos and videos, and find businesses and brands. Rapp, Beitelspacher, Grewal and Hughes (2013) found that more than half of online shoppers interact with retailers on social networking sites such as Facebook and Twitter; and retailers and brands are increasingly capitalising on this new promotional dimension to strengthen their customer relationships. This may signal growing popularity and awareness in the social media use.

Like in other countries, in Tanzania, social media use is directly related to social network platforms which include Facebook, Twitter, YouTube, Blogs, WhatsApp and Instagram. Apart from these worldwide media, Tanzania has other local social media platforms such as Jamii Forum, Michuzi blog, Mabadiliko Forum, Millard Ayo blog, Mpekuzi blog and Bongo blog. Recently, social media has overtaken email as the most prevalent online activity which enables consumers to connect with families, friends and companies by sharing information, thoughts and opinions about different products and brands (Pfeiffer, Kleeb, Mbelwa, & Ahorlu, 2014). Li, Larimon and Leonidou (2021) and Tuten (2020) contend that social media gives marketers an opportunity to communicate their products and services and enjoy wide feedback to enable them meet customer needs profitably.

The fundamental aspect that makes social media desirable by different users is the content, which allows people of different age groups and diverse cultures to easily engage in dialogues that are open to both positive as well as negative comments, transparently (Hayes & Carr, 2021; Grewal & Levy, 2014). Hence, they make anyone gain access and voice out opinions including comments attributed to the growth of firms (Men, O'Neil, Ewing, 2020; Accenture, 2011). Dervojeda, Verzijl, Nagtegaal, and Lengton (2014) suggest that there is increased engagement over social media among people who trust one another, by having positive attitudes in making purchase decisions. Despite companies having less control about information flow, it is advantageous for consumers to trust each other, while businesses intervene only as observers as well as moderators and create further engagement by using comments and feedback to improve services/products including ties (Hayes & Carr, 2021).

By looking at the massive amounts and types of social media campaigns, e-commerce websites, sales emails, forums etc, it seems that companies of all sizes have been converting their marketing tactics to the internet to facilitate accessibility to their target audience (Chui, Mayika, Dobbs, Roxburgh, Suzan, 2012) as opposed to use of old-style advertising through mass media to reach a wider group of readers and viewers, which is on the decline. They quote Sergio Zyman who in the late 90s argued that marketing had changed due to the emerging development of ICT in that customers have been given more power to choose to create what is called 'consumer democracy', where consumers around the globe use the benefits of technology to search and share information about products.

Social media places consumers on the limelight of the business world and provides marketers with a new set of tactics to interact and assimilate with the brands through innovative ways. According to Mariu, Suphian and Jani (2020) the main market segment for

CC BY NC ND

carbonated soft drinks is the younger cohort that includes youths in higher learning institutions. In essence, marketers have to realise how social media influences consumer buying behaviour in this particular segment which happens to be a very large market for soft drinks.

In the 21st century, companies are focused on becoming more creative in ways that they can well capture customers' attention from their rivals. According to Berger and Milkman (2011), efforts are being done to make written and oral content a factor and channel of communication. The content used on social media to market a product depends on whether the aim is to educate, inform, persuade, entertain, or sell a product. Barker (2017) reminds that, social media that started as a platform for persons to share photos with their friends and family, has now evolved as a more vital element of organisations marketing tactics with greater impact for businesses. Most shoppers today base their buying decisions on social media; hence, marketers who sell online and those who do not have to make sure they create awareness of their products or services, to link with customers and increase treasured insight from them (Pütter, 2017). That is why; Berger and Milkman (2011) and Shiflet (2019) suggest that brand content sharebility by customers should encompass analysing its content and user characteristics to match their motivation.

Consumers' attitudes towards social media have also been of interest to businesses including the soft drinks industry. It is contended that consumers with positive attitudes towards social media advertising will show positive responses and vice versa (Boateng & Okoe, 2015). However, the outcome can partly be moderated by consumer attitudes towards the company, using social media advertising. Duh and Dabula (2021), and Perner (2018) observed that consumer attitudes are a combination of consumer beliefs, feelings and behavioural intentions towards some object within the context of marketing (a brand or retail store). Overall, it is crucial to understand the factors that motivate consumers to interact with smartphone advertisements and therefore determine what stimulates their decision to purchase (Martins, Costa, Oliveira, Goncalves & Branco, 2019).

As far as soft drink in Tanzania is concerned, their manufacturing is passing through a phase of change which is a period of substantial growth and solid competition partly because customers are looking for healthier options. Lacy-Nichols (2020) contends that governments around the world are pressuring the soft drinks industry to reformulate sugary drinks, in particular through taxes on sugar content or front-of-pack labels identifying products high in sugar. In the 21st century where Web 2.0 is very popular, soft drinks companies have adopted different ways of communicating with their target customers which has led to variation in consumer behaviour. Marketers of soft drinks in Tanzania have been putting a lot of effort on social media to be able to fit in the competitive advantage for the success of their companies (Berry, 2010; Malm & Toyama, 2021).

According to Ministry of Industry and Trade (2012), the drinking pattern and consumer demand of soft drinks differ between one region and another due to differences in weather, geographic location and economic aspects. This information is vital, as different marketing tactics need to be employed to suit consumer wants and needs. Marketers need to keep up with new products and changing drinking tendencies, which are vital in developing appropriate marketing communication tactics in the market of soft drinks in Tanzania. BMI Research (2016) asserts that the market for soft drinks in Tanzania is also somewhat accounted for by some market segmentation variables namely, geographical scope, demographic composition, and psychographic characteristics. For example, the drinking pattern of soft drinks in Dar es Salaam is quite different from that of other regions because of weather differences, economic factors as well as population factors. The Ministry of Industry

and Trade (2012) reports further that consumers are at different levels of brand awareness, which may require marketers to come up with strategies that will address this constraint in their marketing communication decisions.

The consistent and divergent use of social media has proved the effectiveness of social media in customer behaviour, especially the youth who are good users of social media and soft drinks (Frederick & Obed, 2017). According to TICR (2012), the soft drinks market in Tanzania is expanding and the economic declarations show that sales and revenue are continuously increasing. Soft drink manufacturing is adopting a new type of medium and endorsement by utilising the internet and social media, in particular, to communicate with their customers. Nearly all soft drinks companies have devoted websites that are advanced with a target market in mind. The websites are used to present interactive options, information, and publicity to their customers. For example, Coca-Cola and Pepsi companies have effectively employed a variety of social media such as Facebook, Twitter and YouTube for the aim of communicating, informing, persuading, entertaining, promoting as well as forming a mutual bond with consumers and being able to increase profound knowledge of their consumer behaviour.

Regarding youth purchasing behaviour at the University of Dar es Salaam, Pfeiffer, Kleeb, Mbelwa and Ahorlu (2014) verify that social media has intensely altered the way the youth get information and connect with one another; it is now very popular and faster among youths around the World. Due to increased broadband mobile Internet coverage, mostly in the urban but even in some rural sites in many African countries, it is possible for the youth to connect anywhere through Facebook, Twitter, and YouTube. Mutarubukwa and Mazana (2020) projected that by 2019 the number of internet users in the world would have been around 4.5 billion, and in Africa the number would have reached around 5.3 million. In Tanzania alone, the number of internet subscribers as of December (2011) stood at 4.9 million.

The World Bank Report (2012) notes that youth social media is a place of representation that is shaped by, and also reshape, popular youth culture. Levin, Levin and Weller (2005) noted that most of online buyers are the youth, who are normally better educated, more computer literate and more likely to spend time on the internet and get exposed to new things. While social media is known to be useful in supporting life transition for young people, little is known about the specific use patterns or activities associated with the effectiveness of social media in youth purchasing behaviour (Wang, Yu, Wei, 2012; Thomas, Briggs, Hart, Kerrigan, 2017). The University of Dar es Salaam where the unit of enquiry was conducted is the oldest public university in Tanzania with 19,650 students of which 17,098 are undergraduates and 2,552 are postgraduate students (https://www.udsm.ac.tz). The current article dwells on non PhD students who are considered falling within the youth age category of interest. The article assesses the extent to which content; attitude and awareness of social media affect youth purchasing behaviour of soft drinks in Tanzania as evidenced from University of Dar es Salaam students.

CC BY NC ND

Literature review

Theoretical literature review

The primary objective of advertising is to reach prospective customers and influence their awareness, attitudes and buying behaviour (Mbiku, 2013). Companies spend a lot of money to communicate and understand what makes potential customers behave the way they do. Today, social media is one of the effective tools for the endured created awareness, attitude and content dissemination to potential buyer which subsequently would influence consumer buying behaviour. Kumar and Yadav (2021) and Kumar (2010) considers consumer buying behaviour as the buying of goods and services for own consumption. Khaniwale (2015) clarifies that consumer buying behaviour comprises the study of persons and the methods they employ to choose, utilise and set out products and services to fulfil their wants and the effect that these approaches have on the consumer and the society as a whole.

Social media is a core component of young people's lives and has been widely researched in relation to relationship building and maintenance (Thomas *et al.*, 2017). Burgess, Marwick, and Poell (2017) delineate social media as those digital platforms, services and apps built around the merging of content sharing, public communication, and interpersonal connection. Kaufhold, Rupp, Reuter and Habdank (2020) and Miller, Sinanan, Wang, McDonald, Haynes, Costa and Nicolescu (2016) add that social media is an internet based platform and content that allow the formation and exchange of user created content, usually using either mobile or web-based technologies.

Empirical literature review

Social media has stimulated a lot of interest amongst researchers and academicians. As the use of social media is rising at a remarkable rate and companies showing tendencies of allocating increasing budget to social media as a means to communicate and grasp customers, the study of social media has become of great importance to all interested parties.

Darban and Wei (2012) who studied on the impact of online social networks on consumers' purchasing decisions South Central, Sweden, found out that online social networks influence the process of consumers' buying decision in food retailer shops. This is basically because Facebook features bring people closer, allowing consumers to interact and give feedback from time to time through supermarket Facebook pages. Nolcheska (2017) researched the influence of social networks on consumer behaviour in the Republic of Macedonia. Using quantitative research method, findings envisaged that buyers have positive attitudes towards social networks and that there is positive relationship between this attitude and the influence of social networks on consumer purchasing decision. Simpson, Ohri, and Lobaugh (2016) at Westlake, Texas conducted a related study; this study focused on how social media affects consumers from different age ranges and races. It was found that 47% of youths were influenced in their purchase by social media compared to 19% of other age groups. An earlier study by Forbes and Vespoli (2013) investigated the way social media influences consumer buying behaviour in the US. The findings indicated that 59% of respondent users of Facebook used social media to receive product recommendation from friends or contacts. These results support the view that social media has an impact on the buying behaviour of consumers.

In Africa, Themba and Mulala (2013) carried out an investigation on brand related eWOM and its effects on purchase decision in Gaborone, Botswana. The findings of the

study revealed that, largely, commitment in brand related eWOM and opinion seeking behaviour, in particular, positively and significantly affected purchase decision. Nyagucha (2017) study on the impact of social media on consumer decision making process among the youths in Nairobi showed that social media offers them with external incentives to recognise a need for something before buying. In line with this study, the National Policy of Youth Development (2007) in Tanzania classify youths as young men and women from the age group of 15 to 35 years. Contrary to the definition of Kagoya and Mkwizu (2019) who affirmed that African youths are female and male beneath 36 years and beyond 18 years of age.

As for Tanzania, Muriithi and Muriithi (2013) explored students' motives for utilising social network sites in Dar es Salaam, Tanzania. The findings showed that despite using social networks, students can still succeed to be competent enough in maintaining their academic achievement provided they are aware of complimentary use of education-based social network sites to enrich their academic achievement. More related to the current study was a Tanzania based study by Kimambo (2015) who established that most of the users of social media are youths aged between 18 and 34 years. Moreover, use of social media by both individuals and business organisations drew marketers and their customers closer.

Theoretical perspectives

Two theories of the AIDA Model and McLutan Media Theory appear to adequately inform the main constructs of this article.

AIDA Model

Lewis (1925) who was an advertising and sales innovator developed the AIDA Model. Palmer (2005) explains that the message is offered according to an easy model which is to cheer the attention of one's targeted consumers, interest of the targeted ones in the product, promptness of your consumers to desire the product and entail action from the targeted consumers.

Kelley and Hyde (2002) and Fortenberry and McGoldrick (2020), clarify that the AIDA Model process explains how a promotion element can be used by marketers to effect a consumer's perception and attitude towards a product or service. Accordingly, while a product is introduced to the market, the purpose is to grab *attention*. The method used to catch attention will depend on the type of product, choices comprising events, sponsorship, and huge promotion campaigns. The next aim is to hold publics' *interest* which is completed by promoting the features of goods and evidently stating the benefits the product has to offer. The goal at this stage is to offer the buyer information. *Desire* is the third stage, where marketers aspire for the information (interest) buyers have about the products, to create a need to have their product. A distinct selling point will reduce consumers' desire over the rival's products. The last stage is the actual purchase, which is *action*. If a company has been successful with its AIDA strategy then consumers will purchase its products. The responsibility at this stage is to facilitate the purchase action by making it easy.

The AIDA Model explains how one can bring out awareness by the use of marketing strategies like advertising, sales promotion, and personal selling via social media. It is up to

CC BY NC ND

marketers to make sure they are effective and possess the four qualities of the model so as to easily lead a customer to make the purchase decision. Marketers have to make sure they create social media content that will catch the attention of the target consumers; then create interest to gather information of the product. The information gathered by the consumer should then be able to create some desire to get the product or service, hence lead a consumer to a positive action of acquiring a social media advertised product (Kelley & Hyde, 2002, Armielia, 2018).

Media Theory

The Media Theory was developed by McLuhan (1964). McLuhan assumed that people should not only perceive the media itself, but rather the way in which each new media re-styles social life (Kiamu & Musa, 2021; Croteau & Hoynes, 2003). He argued that the social influence of the media becomes an extension of human senses and change our social world. McLuhan debated that when new media technologies were announced into society, the balance of human senses were reworked. His vision was that a distinguishing medium moves the society in which it plays a role, in addition to the content carried over the medium. He admits that the content is vital but also the features of the media as a light bulb forms an environment that influences the viewers in different ways (McLuhan, 1962, Hobbs, 2021).

The Media Theory was applied in this article because different media attract participants who decide to use different kinds of social media platforms. The theory explains how a marketer can fill in consumers' outlooks towards a product or service by choosing the right media platforms to communicate to their target audiences and make them understand what is being portrayed. Marketers have to choose the appropriate social media platforms considering the characteristics of consumers and the nature of the product about which they are trying to communicate (McLuhan, 1964).

Conceptual Framework

The paper was guided by three constructs as featured in the conceptual framework depicted in Figure 1 below.

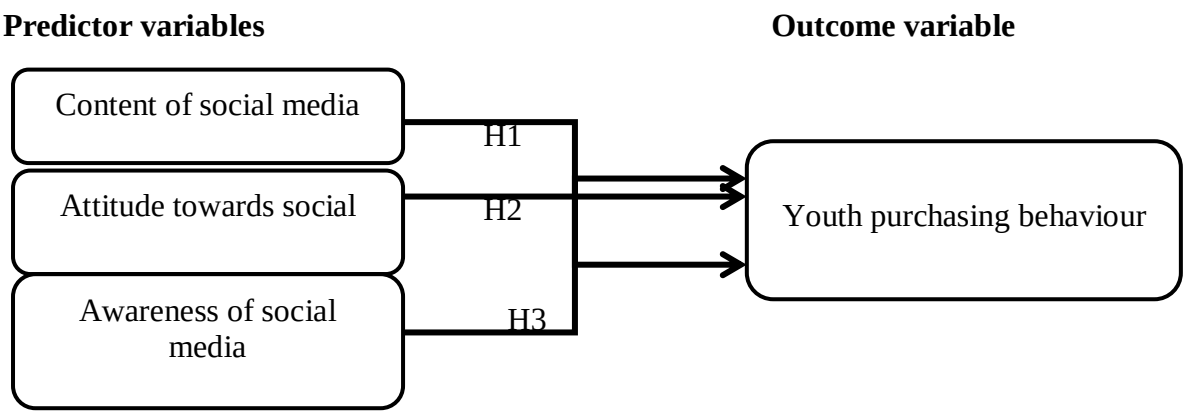

Figure 1: Conceptual Framework Model
Source: Literature review (2019)

In this article three research hypotheses were formulated. The first one was related to content of social media and youth purchasing behaviour. The content used through social media to market a product or service always depends on what the company intends to portray as well as what it wants from it, whether it is to educate, inform, persuade or entertain (Berger & Milkman, 2012). In this regard, it was hypothesised that: "*Content of social media has a strong positive influence on youth purchasing behaviour*".

Attitude towards social media was also treated as one of the predicting variable. Nolcheska (2017) affirms that buyers have a positive attitude towards social network and this influences their purchasing decision. Different studies have stressed that consumer attitude is linked to buying intention and behaviour (Schäufele & Hamm, 2018; Sultan, Tarafder, Pearson & Henryks, 2020; Dangi, Gupta & Narula, 2020). Attitude is a combination of consumer beliefs, feelings and behavioural intentions towards some object within the context of marketing, usually a brand or retail store (Perner, 2018). In social media, attitude has much to do with youth purchasing behaviour since they are always confident when they believe in the company's conveyed message and its intention. It was therefore hypothesised: *"Attitude towards social media has strong positive influence on youth purchasing behaviour".*

Finally, the conceptual framework had awareness of social media as another predicting variable. Marketers today have to ensure that they create awareness to their products or services whether on line or not so as to connect with customers and gain valuable insight from them (Barker, 2017). It was therefore hypothesised: *"Awareness of social media has strong positive influence on youth purchasing behaviour".*

Research Methodology

Research Design

This article embraced the research philosophy of positivism which is based on scientific factual knowledge obtained in the field to produce pure data and facts uninfluenced by human clarification or bias (Crotty, 1998). The study area was the University of Dar es Salaam, which is the oldest and leading university in Tanzania, providing numerous academic programmes from certificate to PhD degree levels (https://www.udsm.ac.tz). The target population comprised all 19,650 students who potentially use social media platforms at UDSM. This study adopted a descriptive research design because it was undertaken to describe characteristics of variables in situations, specifically the characteristics of social media that influence youth buying behaviour. The study employed primarily quantitative methods where inferential statistics using multiple regression analysis was used. The sample size was conveniently drawn from the population under study with the exception of PhD students. Although all convenience samples have less clear generalizability than probability samples, we argue that homogeneous convenience samples as depicted by commonality of the youth category have clearer generalizability relative to conventional convenience samples (Jager, Putnick & Bornstein, 2017). In this study conveniently sampled youth students that meet certain practical criteria, such as easy accessibility, geographical proximity, availability at a given time, or the willingness to participate (Etikan, Musa & Alkassim, 2016) were included for the purpose of the study particularly those who were found in restaurants and cafeteria at accessible time. The sample size was obtained using the formula by Tabachnick, Fidell, and Ullman (2007), which is $N \geq 50+8M$, whereby M is the number of predictor variables and N is the desired sample size. Thus one needs to have a minimum of 50 + 8(3) = 74 respondents.

CC BY NC ND

To accommodate for a non-response possibility, a sample size of 80 was chosen. The response rate was 100%; hence, a sample of 80 was used in the study where students of the University of Dar es Salaam aged between 18 and 35 years were involved as respondents. PhD students were conveniently excluded since majority of them were perceived to be above 35 years hence excluded from youth category. Moreover, the study collected in-depth information from 3 key informants from 3 restaurants around the University of Dar es Salaam premises. A multi-method approach holds potential for understanding the complex phenomena of social world, seeing this world through multiple lenses, and using eclectic methodologies that better respond to the multiple stakeholders of policy issues than a single method or approach to research (Creswell, 1999; Gishen, 2020).

Data collection methods

The study used primary data collected through a structured questionnaire and an interview guide (Zina, 2021). To ensure data quality, a reliability test was done. Leedy and Ormrod (2010) and Macebo, Garcia and Calero (2021) assert that, reliability is attained by ensuring that the entity being measured does not change during the measurement to ensure that the results obtained are reliable. To prove the reliability of the instrument, the Cronbach's Alpha method which measures the average of measurable items and its correlation was computed (Jain & Angural, 2017), as depicted in Table 1:

Table 1: Reliability statistics for individual variables

Predictor variables	Cronbach's Alpha	No. of Items
Social media content	.780	4
Attitude towards social media	.789	4
Social media awareness	.853	4

Source: Field Data (2019)

Table 1 shows the individual alpha results for all the three constructs: social media content (.780), attitude towards social media (.789) and social media awareness (.853). These are all above the minimum acceptable scale of 0.7 (Terziev & Petkova-Georgieva, 2019) making all the three constructs having an acceptable scale of reliability as used in social science. The instrument was also checked for validity through a pretesting the instrument that involved 10 respondents before the instrument was finally vetted by an expert. Quantitative data was collected using a structured questionnaire which was distributed to youth students as they were different cafeteria and shops within the university premises. Data was quantitatively analysed using multiple regression analyses with the aid of SPSS Version 20. The findings were complemented by qualitative data that were gathered through in-depth interviews where quotations were used to add value to the quantitative findings.

Study findings

This part provides the findings, analysis and discussion of the findings which were evaluated using mean and standard deviation as the preliminary findings while correlation and multiple regression analysis were performed for the key constructs.

Characteristics of the respondents

The respondents were asked to provide their background information such as gender, age, education level, favourite brand and the duration the respondents used the brand. In terms of gender, 45 (56.3%) of the respondents were male while 35 (43.8%) were female. The number of males was higher because males surf the internet partly for social media access more frequently compared to females who would only use the internet to visit web pages and different social network platforms. In the view of Guadagno (2018) social media platforms are gendered: men and women engage in different types of social media; they also use and consume different types of social media. It may be that for the purpose of soft drink purchase, social media are of greater use to men who appear to be more inclined to use them for purchase than women who are vested to use it for fun.

Respondents were then asked to indicate their age. Findings indicate that out of 80 respondents, 58 (72.5%) were aged between 18 and 23. On the other hand, 19 (23.8%) of the respondents were aged between 24 and 29 years. Likewise 3 (3.8%) were aged between 30 and 35 years. The findings of the study revealed that most users of social media were youths aged between 18 and 23 years, followed by those between the age of 24 and 29 and lastly by those between 30 and 35 years old. A study by Kimambo (2015), as already mentioned, showed that most users of social media are youths between 18 and 34 years of age, and that people are influenced a lot by advertisements as well as search for information about different products and services.

Respondents were then asked to indicate their level of education. Findings shows that 2 (2.5%) of the respondents had a certificate, 7 (8.8%) had a diploma, 55 (68.8%) had a degree while 16 (20%) had attained a master's degree. The study therefore involved people of all levels of higher education. In related study by Sharma and Asad (2012) it was found out that social media networks usage is the highest among users with post-graduate education, followed by those with a graduate degree, and lowest among people with an intermediate degree.

The study also sought to find out the most favourable brand among the soft drinks consumed by the respondents. It was found that 40 (50%) of the respondents preferred Coca Cola, 32 (40%) preferred Pepsi Cola, 5 (6.3%) preferred Azam Cola and 3 (3.8%) preferred Sayona. The findings imply that Coca Cola was most favoured brand. However, no evidence was immediately available to prove that the choice was influenced by social media use.

Mean and Standard Deviations

The mean analysis was computed to show the most influencing predictor variable on the outcome variable. The results of the analysis are provided in Table 2:

Table 2: Mean and Standard Deviations

Variable	Mean	Standard Deviation
Content of social media	3.68	.937
Attitude towards social media	3.31	1.048
Awareness of social media	3.76	.903

Source: Field Data (2019).

CC BY NC ND

Findings as depicted in Table 2 show that *awareness* of social media creates the highest predicting variable which influences youth purchasing behaviour as the outcome variable with mean value (M = 3.76). In a study by Bilgin (2018) through social media marketing activities it was found that while brand awareness and brand image have a significant effect on brand loyalty yet brand awareness had a limited effect on the brand image. In an in-depth interview, the manager of one Restaurant located at the University of Dar es Salaam, had this to say:

> Without creating awareness people cannot reach to one's products or services - this is what makes social media to be very effective in influencing consumer buying behaviour.

This is followed by *content* of social media with mean value (M = 3.68) which entails that content of social media has moderate influence on youth purchasing behaviour of soft drinks in Tanzania. Liu and Bakici (2019) opine that Enterprise Social Media platforms tend to be deployed in the organizations to improving employees' work performance through facilitating internal communications, knowledge sharing, and collaboration. This may translate that to be effective, the social media content used to market a product should vary depending on whether it is intended to educate, inform, persuade, entertain or sell a product or service. On the other hand, marketers should look on the brand content sharebility as well as analyse its content and its users' characteristics to establish whether it matches their motivation. Finally, *attitude* towards social media has a mean value (M = 3.31) which implies that consumers' attitude has a moderate influence on youth purchasing behaviour of soft drinks. This is supported by Nolcheska (2017) whose findings indicated positive relationship between attitude and the influence of social networks on purchasing decision. Standard deviations of all three constructs were less than 3 (SD<3), suggesting that respondents showed little variation in their opinions as guided in Mbura (2007).

Inferential Statistics

In this part, fitness of model is tested, correlation between variables and results of multiple regressions are analysed and presented.

Model Summary

Fitness of model (Table 3) in predicting the link between variables was tested in order to make sure the model was suitable to enable the objectives of the study to be achieved.

Table 3: Model Summary

Model	R	R Square	Adjusted R Square	Standard Error of Estimate	Change Statistics			Durbin-Watson
					Fd1	Fd2	Sig. F Change	
1	.934	.873	.868	.304	3	76	.000	1.633

Predictor variables: Content, attitude and awareness; **Outcome variable**: Youth purchasing behaviour

Source: Field Data (2019).

Table 3 shows that the findings of all the three predicting variables influence the outcome variable which is the youth purchasing behaviour by 87.3%, calculated from coefficient of determination which is 93.1%. With these findings, social media content, attitude towards social media and social media awareness are good predictors of youth purchasing behaviour. The remaining 12.7% is influenced by other factors other than those three stated in the model.

Correlation Analysis

Correlation analysis (Table 4) is conducted in order to understand the relationship between the three-predictor variables (social media content, attitude towards social media and social media awareness) that are used to measure the effectiveness of social media on youth purchasing behaviour.

Table 4: Correlation analysis

(n = 80)		**Social Media Content**	**Attitude towards Social Media**	**Social Media Awareness**
Social Media Content	Pearson Correlation	1	.313**	.720**
	Sig. (2-tailed)		.005	.000
	N	80	80	80
Attitude towards Social Media	Pearson Correlation	.313**	1	.310**
	Sig. (2-tailed)	.005		.005
	N	80	80	80
Social Media Awareness	Pearson Correlation	.720**	.310**	1
	Sig. (2-tailed)	.000	.005	
	N	80	80	80

**. Correlation is significant at the 0.01 level (2-tailed)

Source: Field Data (2019)

The findings in table 4 show a correlation of r = .313 between social media content and attitude towards social media, r = 310 between social media awareness and attitude towards social media and r = .720 between social media content and social media awareness. These constructs signal the existence of a multicollinearity problem. All the three variables were later tested for multicollinearity during regression analysis where VIF was ascertained.

Multiple Regression Analysis

Multiple regression analysis (Table 5) among the three-predictor variables of content, attitude towards social media and social media awareness with youth purchasing behaviour was conducted. .

CC BY NC ND

Table 5: Multiple Regression Analysis

Model	Unstandardised Coefficients		Standardised Coefficients	T	Sig.	Collinearity statistics
	B	Std. error	Beta			VIF
(Constant)	.167	.165		1.009	.316	
Content of social media	.337	.053	.379	6.360	.000	2.115
Attitude towards social media	.050	.035	.063	1.438	.155	1.128
Awareness of social media	.555	.055	.600	10.093	.000	2.110

Source: Field Data (2019)

Table 5 reveals a relationship between youth purchasing behaviour and social media content of P = 0.000, with attitude towards social media P = 0.155 and with social media awareness P = 0.000. These results show that there is a statistically significant relationship between the two predicting variables namely, social media content and social media awareness with youth purchasing behaviour as (P<0.05). On the other hand, attitude construct had a positive relationship, but statistically insignificant on youth purchasing behaviour (P<0.05). This indicates that youth purchasing behaviour is strongly influenced by social media content and social media awareness. Since moderate and strong positive correlation was observed between the three predictor variables as presented in Table 5, test for multicollinearity was conducted. This was done in order to make sure that a predictor variable was not linearly predicted by other variables. Results of this analysis as presented in Table 5 indicate variance inflation factors (VIF) for all the three predicting variables to be below 5. This means that the predictor variable is less correlated with other variables and the level is within a normal range as suggested by Mbura (2007).

Discussion of the main findings

Social media content and youth purchasing behaviour

The study findings show that social media content, as the study predicting variable, is positive and significant at .000 level with T value of 6.360 on the outcome variable of youth purchasing behaviour. The results entail that youth purchasing behaviour is significantly and positively influenced by social media content. The statement aligns with Milkiman (2011) who revealed that the content used through social media to market a product depends on whether it is intended to educate, inform, persuade, entertain or sell it. On the other side, looking at brand content sharebility by customers, companies have to take note when they are posting particular information by analysing its content and the users' characteristics in order to find out if it will match their motivation. This implies that youth purchasing behaviour like any other consumers depends on the margin of information they get, the branding and packaging of a particular soft drink brand.

The findings also show that a well spread social media content has the ability to make youths act in very specific ways that are positive to brand owners. In the views of Caputo,

Marzi, Pellegrini and Rialti (2018) and Palalic, Ramadani, Gilani, Gerguri-Rashiti and Diana (2020), consumers easily acquire all the necessary product information and reviews from online platforms that allow these consumers to share personal experiences, opinions and knowledge with an interested consumer audience. Simpson *et al*. (2016) also confirm that social media works well with most groups, especially youths. Accordingly, the Deloitte report ascertained that 47% of youths are influenced to purchase by social media compared to 19% for all other age groups. This is due to the fact that social media content is useful in drawing youth attention towards a particular brand; this is essential for the soft drinks companies to win and retain youths as their customers by creating content which matches what they really want. This finding is supported by one restaurant manager in the university who gave the following testimony:

> The content of social media really matters in influencing youth purchasing decisions of soft drinks because even the sales tend to increase for a particular brand especially when that brand has come with a new content (Data from key informant, 15th October, 2019).

This kind of perspective is equally shared by some other managers within UDSM campus. This is shown by a sales representative of one of UDSM's cafeteria who gave the following comment:

> The content is very important in influencing youths through social media so marketers need to have sufficient knowledge on what to put in their content about their product in order to convince buyers specifically youths (Data from key informant, 15th October, 2019).

The Medium Theory posits that the content has less to do with capturing consumers' attention; rather, it has much to do with what attracts consumers when they find it to be relevant to them (McLuhan, 1964). Moreover, it explains how a marketer can fill in consumers' outlook towards a product or service by choosing the right media platforms to communicate to their target audiences and make them understand what content is really being projected.

Youth attitude on social media and purchasing behaviour

The finding show that attitude towards social media, are positive, but has less significant impact on youth purchasing at .155 levels with T value of 1.438. This implies that youth purchasing behaviour in line with social media is weakly influenced by their beliefs and evaluation of salient consequences that form behaviour. The findings are well related with those of Nolcheska (2017) who showed that consumers have positive attitudes towards social networks. Further, Perner (2018) observed that youth's comment and share feedback, thus influencing one another's behaviour and attitude. Communication through social media has been found to affect consumer decision making and marketing strategy. The findings are supported by the manager of one of the students' cafeterias who said:

CC BY NC ND

> The attitude of youths towards a particular brand has little influence on their purchasing behaviour of soft drinks because the taste of soft drinks is almost the same. What youths are always looking for is the package, design and mostly recommendation from their friends (Data from key informant 15th October, 2019).

The kind of thinking by the sales manager of a restaurant in University of Dar es Salaam was quite different from that of the sales manager of another restaurant at Mabibo Hostel Cafeteria within UDSM premises who had the following observation:

> Attitude does not seem to greatly influence youth purchasing behaviour of soft drinks, because it is observable that youths can take any kind of soft drink and more than three bottles per day of different brands (Data from key informant, 15th October, 2019).

However, the kind of perspective given by one restaurant manager is equally shared by that of the sales representative of UDSM cafeteria who opined:

> Attitude matters at a moderate rate because, in spite of the content being portrayed, there are youths who do not take soft drinks because they believe that they have high caffeine and sugar, while others would go for a particular brand believing it represents a particular social status (Data from key informant, 15th October, 2019).

The AIDA Model explains how promotion as an element of marketing strategy can be applied by marketers to influence a consumer's awareness and attitude towards a product or service (Kelley & Hyde, 2002). This is to say that youths' attitudes towards social media have to be considered carefully because changing attitude is very difficult, especially when consumers suspect that the marketer has a self-serving plan in bringing out the change.

Social media awareness and youth purchasing behaviour

Findings show that social media awareness, as the study hypothesis, is positive and has significant impact on youth purchasing behaviour as an outcome variable at .000 level with T value of 10.093. This infers that, youth purchasing behaviour is positively and strongly influenced by social media awareness. The perception is aligned to Barker (2017) who argues that shoppers today base their buying decision on social media, hence marketers who sell online and those who do not have to make efforts to create necessary awareness about products or services they offer so as to link with customers and gain valuable insight from them. Accordingly, Uzir, Hamid and Latiff (2021) notes that digital media is a great way to engage and interact with one's target audience. Soft drink companies use social media, specifically Facebook, Istagram and Twitter to advertise and interact with their customers, hence create awareness by coming up with projects like Coke Studio, Onja Msisimko, Pepsi Nkubwa wao, pepsi commercial by Lionel Messi and Salah, *Sayona- Sambaza furaha yako, Mlipuko wa ladha halisi ya Embe*, etc. so as to influence the youth purchasing behaviour of its products. These projects are used in the traditional as well as social media. By doing so, companies have been effectively influencing youth purchasing behaviour. The findings are supported by the sales manager of one cafeteria at Mabibo Hostel who said the following:

> Awareness really matters in influencing youth purchasing behaviour of soft drinks and it is an undeniable fact that most of well created content on social media tends to bring out good results because a well-portrayed advert on social media tends to spread very fast hence create awareness and influence the need to buy (Data from key informant, 15th October, 2019).

The views given above are shared by a manager of one of the restaurants in the University of Dar es Salaam main campus who gave the following note:

> Without creating awareness, people can't reach your product or service; hence, marketers use paid ads that specifically address a particular target group of customers so as to spread awareness (Data from key informant, 15th October, 2019)

The AIDA Model explains that the first marketing communication mix is advertising which is very effective in creating awareness and interest, stages which are effective in creating desire. Kelley and Hyde (2002) add that when a product is presented to the market, the aim is to grasp consumers' awareness. The method used to get awareness depends on the type of product. Thus, soft drinks companies can gain attention or awareness by creating paid adverts and being more active online on social media platforms than on traditional advertisements.

Conclusion

This study sought to assess the effectiveness of social media on youth purchasing behaviour of soft drinks. From the findings and evidence presented, social media use has been found to be increasingly gaining popularity over time and across the world and particularly in soft drinks companies. Business owners use social media in order to influence consumer purchasing behaviour and thus increase their sales and profits. The study concludes that social media content and awareness significantly influence youth purchasing behaviour of soft drinks; hence, features of social media should be taken seriously for companies to survive in their competitive environment, continue to operate efficiently and make proper marketing decisions concerning its products. Attitude towards social media was found to have weak influence on youth purchasing behaviour.

Recommendations

Based on the findings of the study, marketers of soft drinks should consider using social media such as Facebook, YouTube, Instagram, Whatsup, Twitter, etc, in promoting their brands by largely putting a lot of effort in creating awareness and composing well-suited social media content. Moreover, they should concentrate on the content of social media as a strategy in marketing their brands to ascertain its relevance or consistency to their products because the content will attract customers. Secondly, awareness creation should be enhanced via social media usage since the world has become a virtual society where people have formed their communities in different social media platforms. The media has helped in reaching a wide market, spreading of information quickly as well as creating good will between companies and their consumers. Finally, marketers have to be keen in dealing with

attitudes of their consumers because of the challenge of varying attitudes, mostly when consumers doubt that the marketer has a self-serving plan in carrying out the change.

Areas for further study

The study assessed the effectiveness of social media on youth purchasing behaviour of soft drinks in Tanzania, taking UDSM as a case study. Future researchers could specifically study the impact of social media content and awareness on youth purchasing behaviour of different brands and industries. They could also expand the generalisability of the study by involving a much larger sample size across a number of industries and/or organisations with a representation of different products and services.

References

Accenture. (2011). Social media for public pension organisations: A new model for high performance.

Armielia, A. A. (2018). Celebrity endorsement in Japan tourism based on consumer celebrity worship. *Ultima Management: Jurnal Ilmu Manajemen*, *10*(2), 65-80.

Barker, S. (2017). Digital strategist and how social media is influencing purchase decisions. University of Southern California.

Berger, J., & Milkman, K. L. (2012). What makes online content viral? *Journal of Marketing Research*, *49*(2), 192–205.

Berry, L. (2010). Relationship marketing of services, growing interest, emerging perspectives. *Journal of the Academy of Marketing Science, 23*(4), 17–21.

BMI Research (2016). *Tanzania food & drink report*: BMI's Industry & Forecasts Series to 2020.

Bilgin, Y. (2018). The effect of social media marketing activities on brand awareness, brand image and brand loyalty. *Business & Management Studies: An International Journal*, *6*(1), 128-148.

Boateng, H., & Okoe, A. (2015). Consumers' attitude towards social media advertising and their behavioural response. *Journal of Research in Interactive Marketing, 9(4)*, 299-312.

Burgess, J., Marwick, A., & Poell, T. (Eds.). (2017). *The SAGE handbook of social media*. London: Sage.

Caputo, A., Marzi, G., Pellegrini, M. M., & Rialti, R. (2018). Conflict management in family businesses. *International Journal of Conflict Management*, 29(4), 519-542.

Creswell, J. W. (1999). Mixed-method research: Introduction and application. In *Handbook of educational policy* (pp. 455-472). Academic press.

Crotty, M., & Crotty, M. F. (1998). *The foundations of social research: Meaning and perspective in the research process*. London: Sage.

Chui, M., Manyika, J., Dobbs, R., Roxburgh, C., & Susan L. (2012). *The social economy: Unlocking value and productivity through social technologies* (2nd ed.). New York: McKinsey and Company, Penguine Press.

Croteau, D., & Hoynes, W. (2003). *Media society: Industries, image and audiences* (3rd ed.). Thousand Oaks: Pine Forge Press.

Dangi, N, Gupta, S.K., & Narula, S.A. (2020), "Consumer buying behaviour and purchase intention of organic food: a conceptual framework". *Management of Environmental Quality*, *31*(6), 1515-1530.

Duh, H. I., & Dabula, N. (2021). Millennials' socio-psychology and blood donation intention developed from social media communications: A survey of university students. *Telematics and Informatics, 58*(10), 15-34.

Etikan, I., Musa, S. A., & Alkassim, R. S. (2016). Comparison of convenience sampling and purposive sampling. *American Journal of Theoretical and Applied Statistics, 5*(1), 1-4.

Li, W., & Darban, A. (2012). The impact of online social networks on consumers' purchasing decision: The study of food retailers.

Li, F., Larimo, J., & Leonidou, L. C. (2021). Social media marketing strategy: definition, conceptualization, taxonomy, validation, and future agenda. *Journal of the Academy of Marketing Science, 49*(1), 51-70.

Darban A., & Wei, L. (2012). The impact of online social networks on consumers' purchasing decision: The study of retailers. Master thesis in Business Administration, Jonkoping University.

Dervojeda, K., Verzijl, D., Nagtegaal, F., Lengton, M., Rouwmaat, E., Probst, L., & Frideres, L. (2014). Innovative Business Models for Competitiveness. Social Media for Internationalisation. *Case Study, Business Innovation Observatory, European Commission, 190(12), 1-21.*

Dervojeda, K., Verzijl, D., Nagtegaal, F., Lengton, M., Rouwmaat, E., Probst, L., & Frideres, L. (2014). Innovative Business Models for Competitiveness. Social Media for Internationalisation. *Case Study, Business Innovation Observatory, European Commission, 190(12), 1-21*

Evans, M., Jamal, A., & Foxall, G. (2009). *Consumer behaviour*. John Wiley and Sons Ltd.

Forbes, L. P., & Vespoli, E. (2013). Does social media influence consumer buying behaviour? An investigation of recommendations and purchase, *Journal of Business & Economics Research, 11*(2), 107–113.

Fortenberry, J. L., & McGoldrick, P. J. (2020). Do Billboard Advertisements Drive Customer Retention?: Expanding the "AIDA" Model to "AIDAR". *Journal of Advertising Research, 60*(2), 135-147.

Frederick, V., & Obed, H. (2017). Knowledge, practice and perception of taking soft drinks with food and the metabolic effect on high school students in Ghana, *Endocrinol Metab, 1*(1), 103-119.

Gishen, F. (2020). *Evaluating a curriculum map for undergraduate medical education: a critical analysis through different stakeholder lenses* (Doctoral dissertation, UCL (University College London)).

Grewal, D. & Levy, M. (2014). *Marketing* (4th ed). New York: McGraw Hill/Irwin, Hutchins

Guadagno, R. (2018). Social media, gender, and the future. An interview with Dr. Rosanna Guadagno, November 9, 2018.

Hayes, R. A., & Carr, C. T. (2021). Getting called out: Effects of feedback to social media corporate social responsibility statements. *Public Relations Review,47*(1), 101-119.

Hobbs, R. (2021). *Media literacy in action: Questioning the media*. Rowman & Littlefield Publishers.

Jager, J., Putnick, D. L., & Bornstein, M. H. (2017). II. More than just convenient: The scientific merits of homogeneous convenience samples. *Monographs of the Society for Research in Child Development, 82*(2), 13-30.

Jain, S., & Angural, V. (2017). Use of Cronbach's alpha in dental research. *Medico Research Chronicles, 4*(03), 285-291.

James, C., & Cotnam-Kappel, M. (2020). Doubtful dialogue: How youths navigate the draw (and drawbacks) of online political dialogue. *Learning, Media and Technology*, *45*(2), 129-150.

Kagoya, S. M., & Mkwizu, H, K. (2019). Factors influencing African Youths at Higher Education Institutions to Shop Online: A Study of Uganda. International Journal of Research & Methodology in Social Science, *5*(2); 70-77. DOI: 10.5281/zenodo.3354104

Kaufhold, M. A., Rupp, N., Reuter, C., & Habdank, M. (2020). Mitigating information overload in social media during conflicts and crises: design and evaluation of a cross-platform alerting system. *Behaviour & Information Technology*, *39*(3), 319-342.

Kelley, J. & Hyde, C. (2002). *CIM Coursebook. Marketing in practice*. Elsevier Butterworth; Heinemann.

Khaniwale, M. (2015). Consumer buying behavior. *International Journal of Innovation and Scientific Research*, *14*(2), 278-286.

Kiamu, B. N., & Musa, B. A. (2021). Theorizing the Communication of Digital Religion as Popular Culture in Africa: The Case for Alternative Epistemological Models. *Howard Journal of Communications*, *5*(1), 1-17.

Kimambo, N. M. (2015). Social media in influencing consumer behaviour.

Kraak, V. I., Gootman, J. A., & McGinnis, J. M. (Eds.). (2006). *Food marketing to children and youth: threat or opportunity?* National Academies Press.

Kumar, V., & Shah, D. (2004). Building and sustaining profitable customer loyalty for the 21st century. *Journal of Retailing*, *80* (4), 317–330.

Kumar, S., & Yadav, R. (2021). The impact of shopping motivation on sustainable consumption: A study in the context of green apparel. *Journal of Cleaner Production*, *12*(3), 62-79.

Kumar, A. (2010). Celebrity endorsements and its impact on consumer buying behavior-in context to India.

Lacy-Nichols, J., Scrinis, G., & Carey, R. (2020). The evolution of Coca-Cola, Australia's soft drink reformulation strategy 2003-2017: A thematic analysis of corporate documents. *Food Policy*, *90*(10), 17-33.

Leedy, P. D., & Omrod, J. E. (2010). *Practical research: Planning and design* (9th ed.). Boston: Person Education International.

Levin, A. M., Levin, I. P., & Weller, J. A. (2005). A multi-attribute analysis of preferences for online and offline shopping: Differences across products, consumers, and shopping stages. *Journal of Electronic Commerce Research*, *6*(4), 281-297.

Lewis, E. (1925). AIDA Model. [Retrieved on 19th July 2019.

Liu, Y., & Bakici, T. (2019). Enterprise social media usage: The motives and the moderating role of public social media experience. *Computers in Human Behavior*, *10*(1), 163-172.

Li, F., Larimo, J., & Leonidou, L. C. (2021). Social media marketing strategy: definition, conceptualization, taxonomy, validation, and future agenda. *Journal of the Academy of Marketing Science*, *49*(1), 51-70.

Malm, M. K., & Toyama, K. (2021). The burdens and the benefits: Socio-economic impacts of mobile phone ownership in Tanzania. *World Development Perspectives*, *21*(6), 100-118.

Mancebo, J., García, F., & Calero, C. (2021). A Process for Analysing the Energy Efficiency of Software. *Information and Software Technology*, *10*(3), 65-80.

Marius, R., Suphian, R., & Jani, D. (2020). Determinants of soft drink customer satisfaction and purchase intentions: Comparison between Tanzania's and South Korea's customers. *Business Management Review*, *23*(1),70-78.

Martins, J., Costa, C., Oliveira, T., Gonçalves, R., & Branco, F. (2019). How smartphone advertising influences consumers' purchase intention. *Journal of Business Research, 94*(10), 378-387.

Mbiku, M. (2013). The role of advertisement on consumer buying behaviour: The case of Coca Cola Company, Dar es Salaam (Doctoral Dissertation, Mzumbe University).

Mbura, O. K. (2007). The role of entrepreneurial networks in the acquisition of marketing information (MI) resources. P. A., University of Dar es Salaam.

McLuhan, M. (1962). *The Gutenberg galaxy. The marking of typographic man*. New York: NBC.

McLuhan, M. (1964). *Understanding media: The extension of man.* New York: NBC.

Men, L. R., O'Neil, J., & Ewing, M. (2020). Examining the effects of internal social media usage on employee engagement. *Public Relations Review, 46*(2), 101-118.

Miller, D., Sinanan, J., Wang, X., McDonald, T., Haynes, N., Costa, E., & Nicolescu, R. (2016). *How the world changed social media* (p. 286). UCL press.

Ministry of Industry and Trade. (2012). Tanzania Industrial Competitiveness Report 2012.

Muriithi, M. K., & Muriithi, I. W. (2013). Student's motives for utilizing social networking sites in private universities in Dar Es salaam, Tanzania. *Academic Research International, 4*(4), 74-83.

Mutarubukwa, P. A., & Mazana, M. Y. (2020). Exploring the possibility of using social media as a teaching and learning tool: A case of selected higher learning institutions in Dar es Salaam. *Business Education Journal, 1*(1), 7-20.

Nolcheska, V. (2017). The influence of social network on consumer behaviour. *Balkan and Near Eastern Journal of Social Sciences, 3*(4), 95-112.

Nyagucha, M. A. (2017). Impact of social media on consumer's decision making process among the youth in Nairobi. Doctoral Dissertation, United States International University-Africa.

Palalic, R., Ramadani, V., Gilani, S. M., Gërguri-Rashiti, S., & Dana, L. P. (2020). Social media and consumer buying behavior decision: What entrepreneurs should know?. *Management Decision, 10*(2), 19-36.

Palmer, A. (2005). *Principles of service marketing* (4th ed). Berkshire: McGraw-Hill Education.

Perner, L. (2018). Consumer behaviour. Retrieved from https://www.consumerpschologist.com on May 7th 2019.

Pfeiffer, C., Kleeb, M., Mbelwa A., & Ahorlu, C. (2014). The use of social media among adolescents in Dar es Salaam and Mtwara, Tanzania. *Reproductive Health Matters, 22*(43), 178–186.

Qalati, S. A., Yuan, L. W., Khan, M. A. S., & Anwar, F. (2021). A mediated model on the adoption of social media and SMEs' performance in developing countries. *Technology in Society, 64*(10), 101-115.

Pütter, M. (2017). The impact of social media on consumer buying intention. *Marketing, 3*(1), 7-13.

Rapp, A., Beitelspacher, L. S., Grewal, D., & Hughes, D. E. (2013). Understanding social media effects across seller, retailer, and consumer interactions. *Journal of the Academy of Marketing Science, 41*(5), 547–566.

CC BY NC ND

Schäufele, I., & Hamm, U. (2018). Organic wine purchase behaviour in Germany: Exploring the attitude-behaviour-gap with data from a household panel. *Food Quality and Preference*, *63*, 1–11.

Sharma, S., & Asad, R. (2012). Assessing the impact of Web 2.0 on consumer purchasing decision: Indian perspective. *International Journal of Marketing and Technology*, *2*(7), 125–139.

Simpson, J., Ohri L., & Lobaugh K. (2016). *The new digital divide*. Deloitte University Press.

Sivasankaran, D. S. (2017). Marketing and its impact on buying behaviour of youths. *International Journal of Research in Management & Business Studies (IJRMBS2017)*, 13-54.

Shiflet, M. (2019). *Viral Marketing: Concept Explication and Case Studies in the Video Game and Esports Industries* (Doctoral dissertation, Ohio University).

Tabachnick, B. G., Fidell, L. S., & Ullman, J. B. (2007). *Using multivariate statistics* (Vol. 5, pp. 481-498). Boston, MA: Pearson.

Tuten, T. L. (2020). *Social media marketing*. London: Sage.

Sultan, P., Tarafder, T., Pearson, D., & Henryks, J. (2020). Intention-behaviour gap and perceived behavioural control-behaviour gap in theory of planned behaviour: Moderating roles of communication, satisfaction and trust in organic food consumption. *Food Quality and Preference*, *81*(11), 103-118.

TICR (2012). *Tanzania Industrial Competitiveness Report*, Tanzania.

Terziev, V., & Petkova-Georgieva, S. (2019). The performance measurement system key indicators and the determinants impact on the level of decentralisation using as an example a sub-divisional unit from the Bulgarian social health care experience. *Proceedings of SOCIOINT*.

Themba, G., & Mulala, M. (2013). Brand related eWOM and its effects on purchase decisions: An empirical study of University of Botswana students. *International Journal of Business and Management*, *19*(5), 31–41.

Thomas, L., Briggs, P., Hart, A., & Kerrigan, F. (2017). Understanding social media and identity work in young people transitioning to university. *Computers in Human Behaviour*, *76*(12), 541–553.

Uzir, M. U. H., Hamid, A. B. A., & Latiff, A. S. A. (2021). Does customer satisfaction exist in purchasing and usage of electronic home appliances in Bangladesh through interaction effects of social media? *International Journal of Business Excellence*, *23*(1), 113-137.

Wang, X., Yu, C., & Wei, Y. (2012) Social media peer communication and impacts on purchase intentions: A consumer socialisation framework. *Journal of Interactive Marketing*, *26*(4), 198–208.

World Bank (2012). Information, Communication Technologies, & infoDev (Program). *Information and Communications for development 2012: Maximizing mobile*. World Bank Publications.

Zina, O. (2021). *The essential guide to doing your research project*. London: Sage.